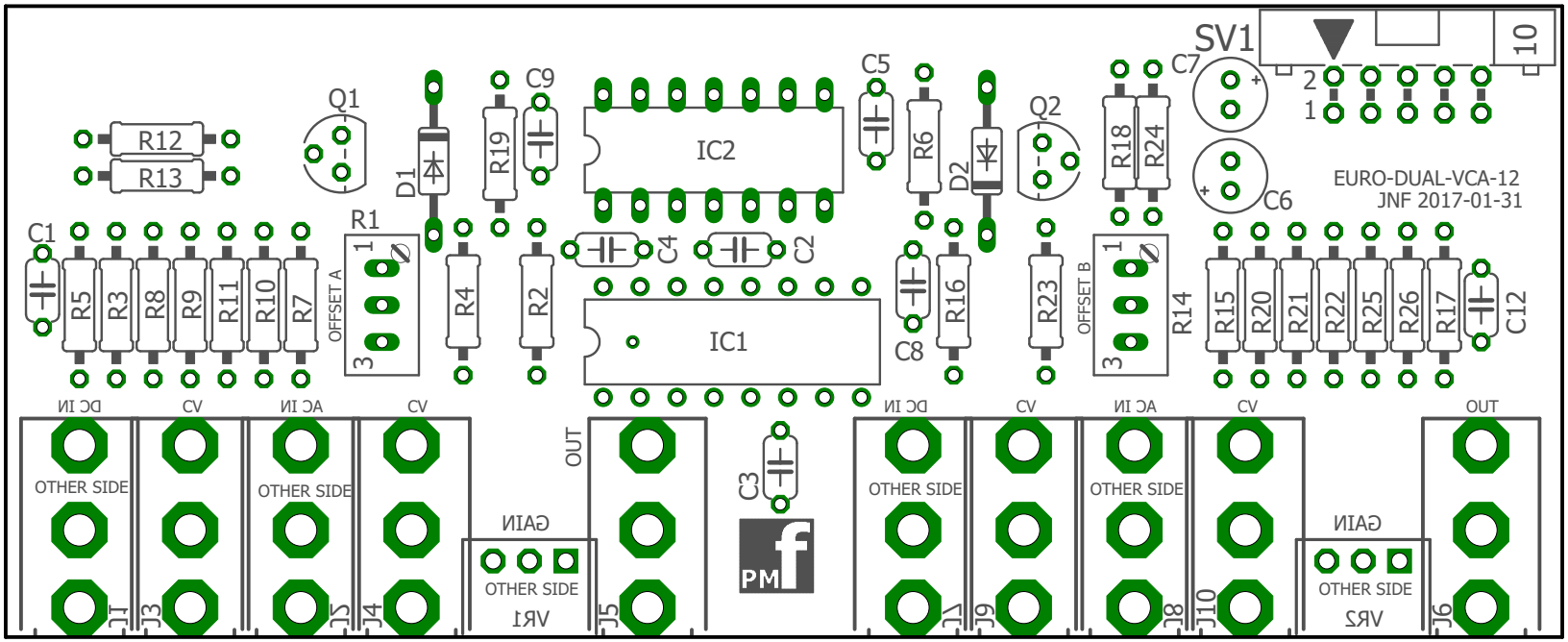
EURO-DUAL-VCA-12
JNF 2017-01-31
SV1
10
2
1
C7
C6
Q1
Q2
D1
D2
R12
R13
R19
C9
IC2
C5
R6
R18
R24
C1
R5
R3
R8
R9
R11
R10
R7
R1
OFFSET A
R4
R2
C4
C2
IC1
C8
R16
R23
OFFSET B
R14
R15
R20
R21
R22
R25
R26
R17
C12
C3
DC IN
CV
AC IN
CV
OUT
OTHER SIDE
J1
J3
J5
J4
GAIN
VR1
J5
J7
J9
J8
J10
VR2
J6